RoHS

W4202VWJ-2xNP-X X

HSG Material / Color
None:PA66-V2 Natural
BK:PA66-V2 Black
V0:PA66-V0 Natural
V0BK:PA66-V0 Black
LP:LCP-V0 Natural
LPBK:LCP-V0 Black
9T:PA9T-V0 Natural
9TBK:PA9T-V0 Black
46:PA46-V0 Natural
46BK:PA46-V0 Black
6T:PA6T-V0 Natural
6TBK:PA6T-V0 Black

Contact Finish
None:Tin-Plated
SW:Matte Tin-Plated
G:Gold-flash
G3:3u″ Gold
G10:10u″ Gold
G15:15u″ Gold
G30:30u″ Gold

■ SPECIFICATIONS

- Voltage rating: 600V AC, DC
- Current rating: 7A, AC, DC
- Withstanding Voltage: 1500V AC/minute
- Insulation resistance:1000MΩ min
- Temperature range: -25° C~+85° C
- Contact resistance: 20mΩ max

■ WAFER

- Part No.: W4202VWJ-2xNP-XX
- Poles : 02-24P
- Housing Material: PA66 UL94V-2 or UL94V-0
- Pin Material: Brass
- Contact Area Plating: Tin-Plated or Gold-Flash
- PIN L=1.14x12.70
- The Dimension Marked "▼" Must Be Recorded

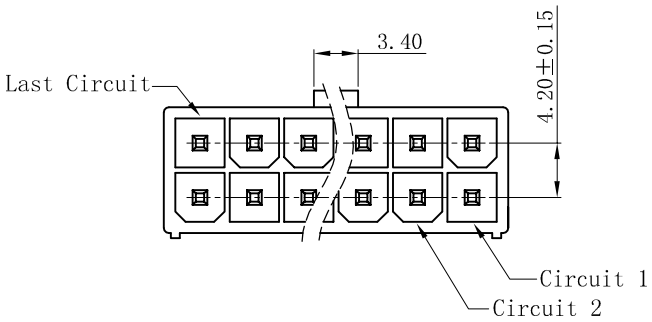

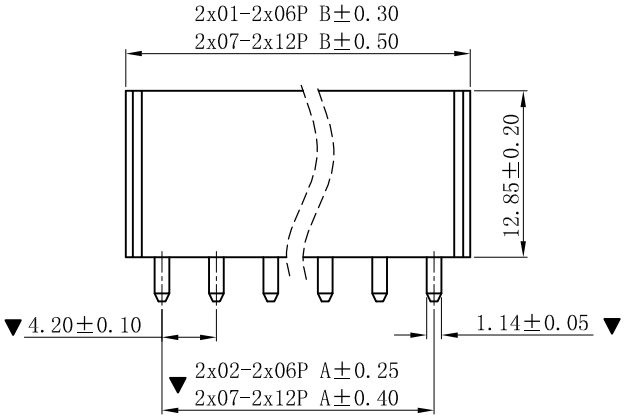

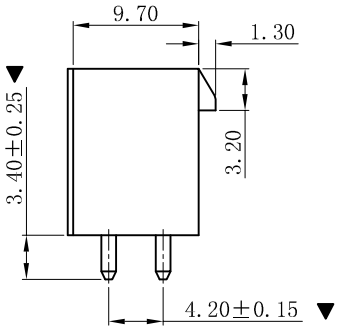

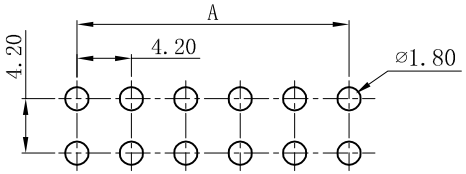

P.C.B LAYOUT

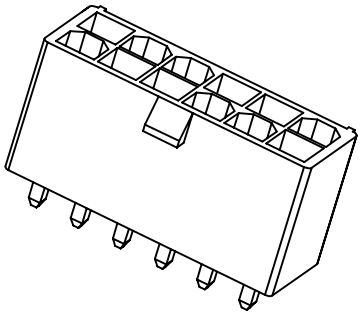

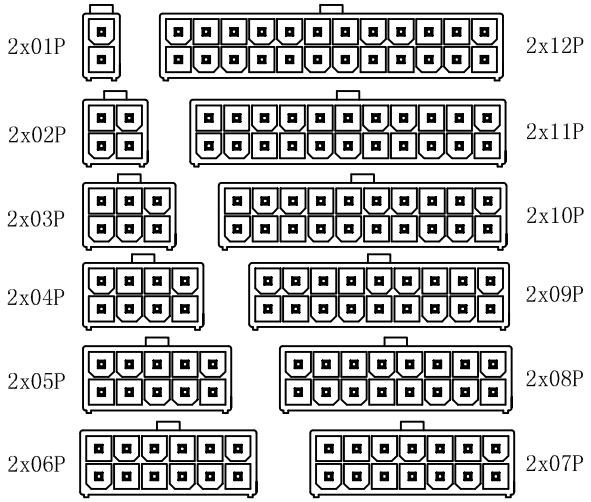

CIRCUIT SIZE LAYOUT

PART NO.	Dimensions(mm) A	Dimensions(mm) B
2x01	--	5.60
2x02	4.20	9.80
2x03	8.40	14.00
2x04	12.60	18.20
2x05	16.80	22.40
2x06	21.00	26.60
2x07	25.20	30.80
2x08	29.40	35.00
2x09	33.60	39.20
2x10	37.80	43.40
2x11	42.00	47.60
2x12	46.20	51.80

版次 REV.	说明 DESCRIPTION	日期 DATE.	承认 APPRO.
D	更新图面	2019-07-03	PH.Duan
C	修订版本	2015-11-04	陈雄军
B	变更图宽格式内容	2013-12-27	陈雄军
A	新版本	2011-05-24	陈雄军

一般公差 GENERAL TOLERANCE:	0±0.30 .0±0.25 .00±0.20 .000±0.05 ANGLE. ±1°
绘图/DR	PH.Duan
审核/CHECK	陈雄军
核准/APPRO	胡 进
日期/DATE	2019-07-03

XYDZ® 东莞市祥运连接器有限公司
Connectors DongGuan XiangYun Connectors CO.,Ltd

投影法 Projection	
单位 Unit	MM
比例/Scale	1:1
大小/SIZE	A4
页码/SHEET	1/1
版本/Rev	D

品 名 (PART NEME): Molex 4.20mm 180° 无筋 Wafer Connector Series

料 号 (PART NO): W4202VWJ-2xNP-XX

状态码: C