RoHS

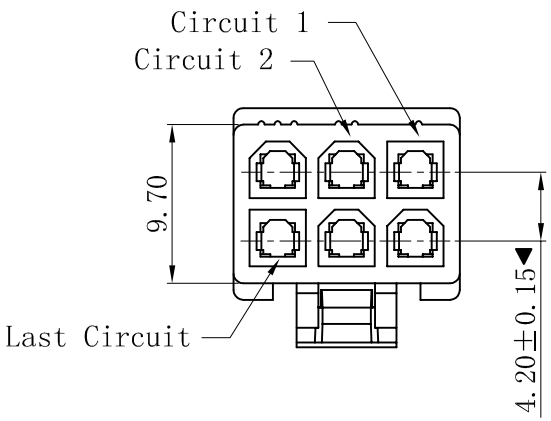

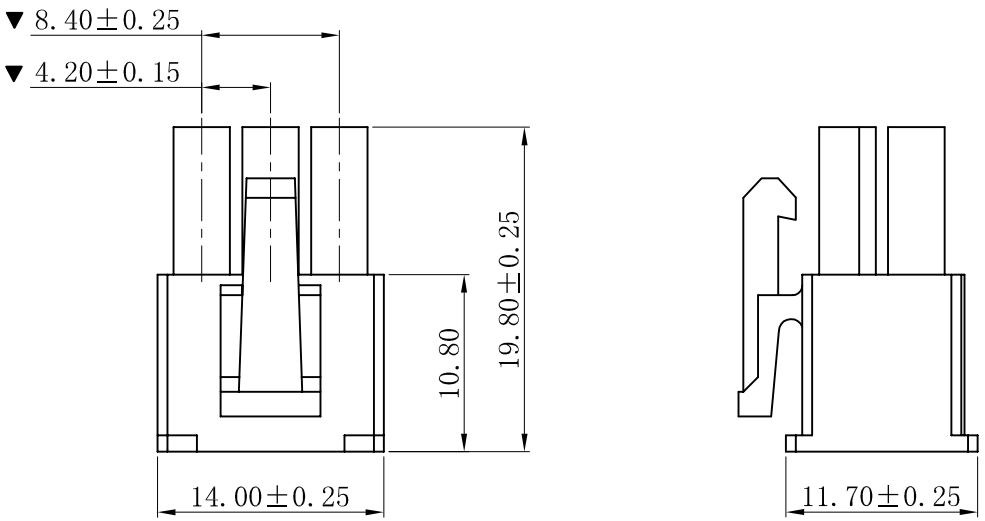

■ SPECIFICATIONS

- Voltage rating: 600V AC, DC
- Current rating: 7A, AC, DC
- Withstanding Voltage: 1500V AC/minute
- Insulation resistance:1000MΩ min
- Temperature range: -25° C~+85° C

■ HOUSING

- Part No.: H4201-2x03P-PCI-BK
- Poles: 06P
- Housing Material: PA66 UL94V-2 Black
- Mates With: H4202 dual row receptacle
- Use With: T4202 Terminal
- The Dimension Marked "▼" Must Be Recorded

版次 REV.	说明 DESCRIPTION	日期 DATE.	承认 APPRO.
B	更新图面	2019-07-03	PH.Duan
A	新版本	2019-04-23	PH.Duan

一般公差 GENERAL TOLERANCE:	0±0.30 .0±0.25 .00±0.20 .000±0.05 ANGLE. ±1°
绘图/DR	PH.Duan
审核/CHECK	陈雄军
核准/APPRO	胡 进
日期/DATE	2019-07-03

XYDZ® 东莞市祥运连接器有限公司
Connectors DongGuan XiangYun Connectors CO.,Ltd

投影法 Projection	
单位 Unit	MM
比例/Scale	1:1
大小/SIZE	A4
页码/SHEET	1/1
版本/Rev	B

品 名 (PART NEME)	Molex 4.20mm PCI Male Housing Connector Series	
料 号 (PART NO)	H4201-2x03P-PCI-BK	状态码 C