RoHS

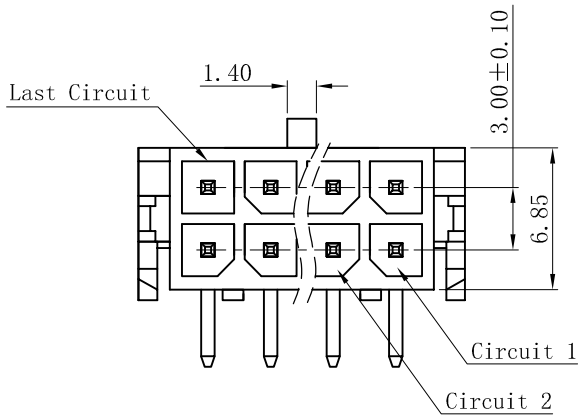

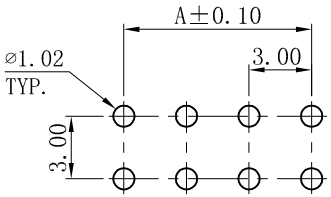

P.C.B LAYOUT: TOP VIEW
TOLERANCE: ±0.05mm

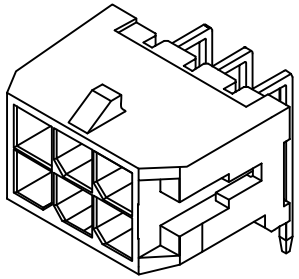

■ SPECIFICATIONS

- Voltage rating: 250V AC, DC
- Current rating: 5A, AC, DC
- Withstanding Voltage: 1500V AC/minute
- Insulation resistance:1000MΩ min
- Temperature range: -25° C~+85° C
- Contact resistance: 20mΩ max

■ WAFER

- Part No.: W3045R-2xNP-T2
- Poles : 02-24P
- Housing Material: PA66 15%GF UL94V-0 Black
- Pin Material: Brass
- Contact Area Plating: Tin-plated
- The Dimension Marked "▼" Must Be Recorded

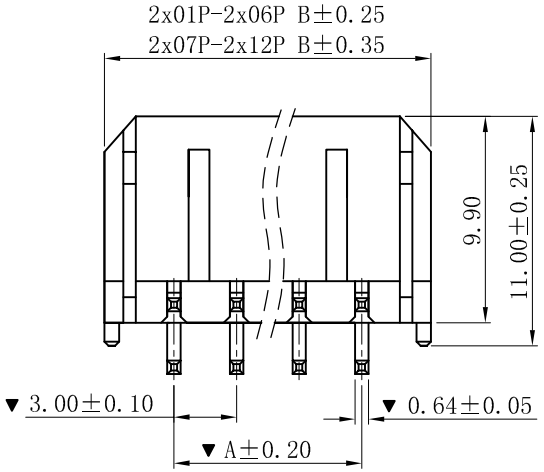

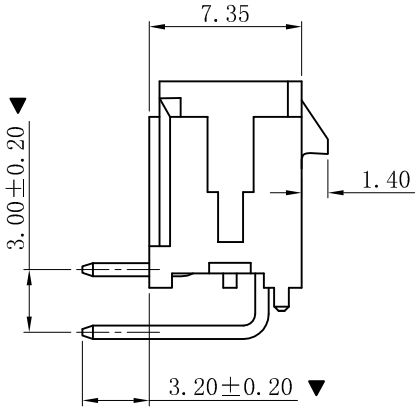

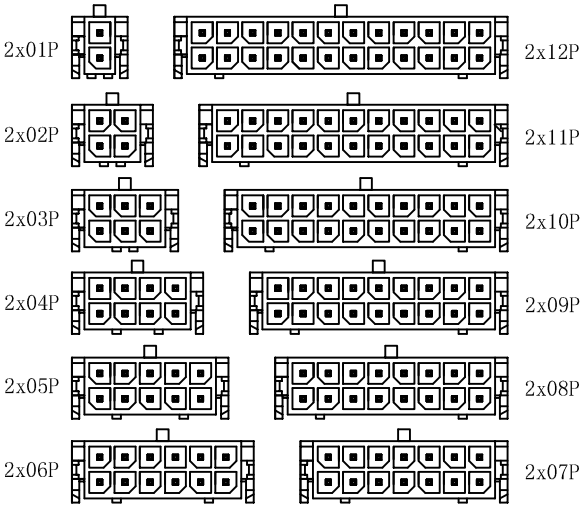

CIRCUIT SIZE LAYOUT

Poles	Dimensions(mm)	
	A	B
2x01	--	6.65
2x02	3.00	9.65
2x03	6.00	12.65
2x04	9.00	15.65
2x05	12.00	18.65
2x06	15.00	21.65
2x07	18.00	24.65
2x08	21.00	27.65
2x09	24.00	30.65
2x10	27.00	33.65
2x11	30.00	36.65
2x12	33.00	39.65

版次 REV.	说明 DESCRIPTION	日期 DATE.	承认 APPRO.
A	新版本	2019-06-03	PH.Duan

一般公差 GENERAL TOLERANCE:	0±0.30 .0±0.25 .00±0.20 .000±0.05 ANGLE. ±1°
绘图/DR	PH.Duan
审核/CHECK	陈雄军
核准/APPRO	胡 进
日期/DATE	2019-06-03

XYDZ® 东莞市祥运连接器有限公司
Connectors DongGuan XiangYun Connectors CO.,Ltd

投影法 Projection		品 名 (PART NEME)	Molex 3.0mm DIP 90° Wafer Connector Series
单位 Unit	MM		
比例/Scale	1:1		
大小/SIZE	A4	料 号 (PART NO)	W3045R-2xNP-T2
页码/SHEET	1/1		状态码 C
版本/Rev	A		