RoHS

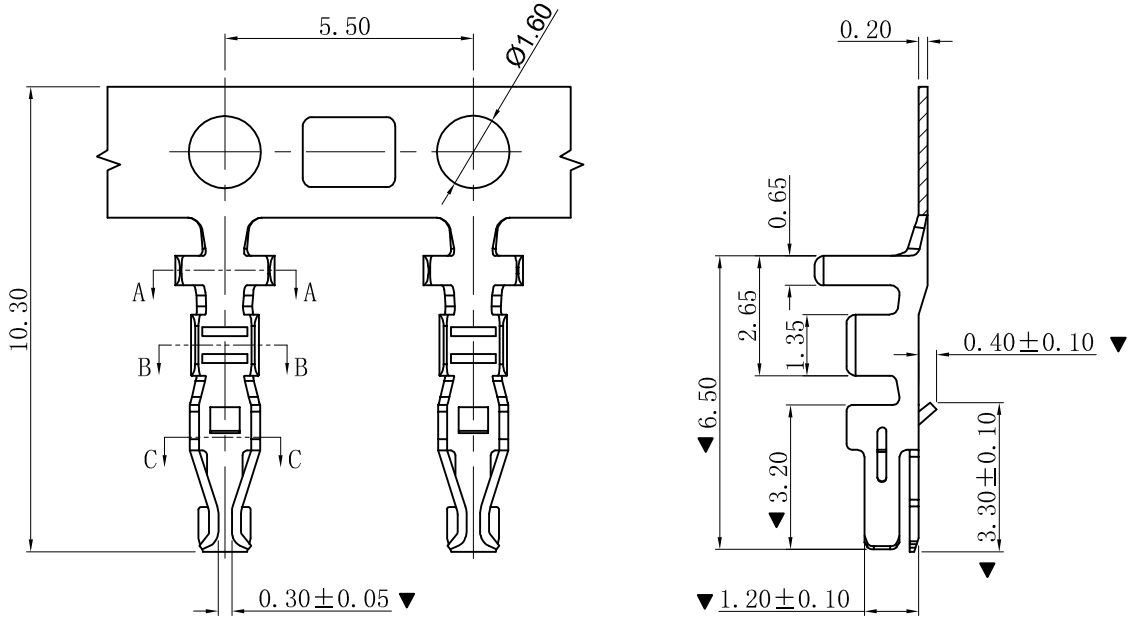

■SPECIFICATIONS

- Voltage Rating: 250V AC, DC
- Current Rating: 3.0A, AC, DC
- Withstanding Voltage: 800V AC/minute
- Insulation Resistance:1000MΩ min
- Temperature range: -40° C~+105° C
- Contact resistance: 20mΩ max

■TERMINAL

- Part No.: T2013PT
- Applicable wire: AWG#22-#28
- Material: Phosphor Bronze
- Finish: Tin-Plated
- The Dimension Marked "▼" Must Be Recorded

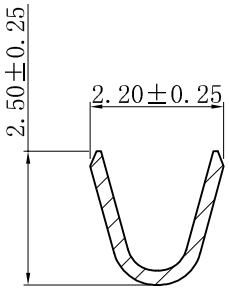

SECTION: A-A

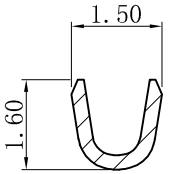

SECTION: B-B

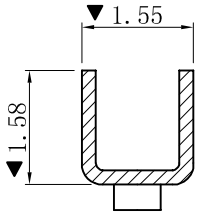

SECTION: C-C

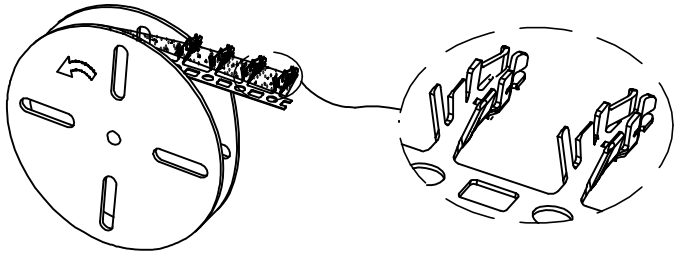

收料方向

SCALE 4:1

版次 REV.	说明 DESCRIPTION	日期 DATE.	承认 APPRO.
B	更新图面	2019-06-03	PH.Duan
A	新版本	2018-10-23	PH.Duan

一般公差 GENERAL TOLERANCE:	0±0.30 .0±0.25 .00±0.20 .000±0.05 ANGLE. ±1°		
绘图/DR	PH.Duan	投影法 Projection	
审核/CHECK	陈雄军	单位 Unit	MM
核准/APPRO	胡 进	比例/Scale	1:1
日期/DATE	2018-10-23	大小/SIZE	A4
		页码/SHEET	1/1
		版本/Rev	B

XYDZ® 东莞市祥运连接器有限公司
Connectors DongGuan XiangYun Connectors CO.,Ltd

品 名 (PART NEME)	PA2.00mm Female Terminal Connector Series		
料 号 (PART NO)	T2013PT	状态码	C