RoHS

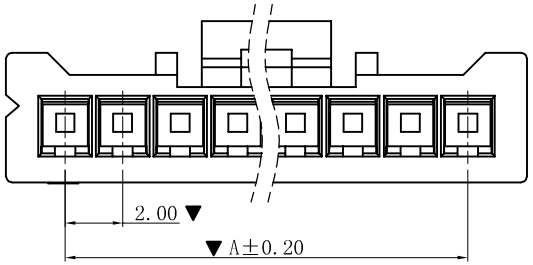

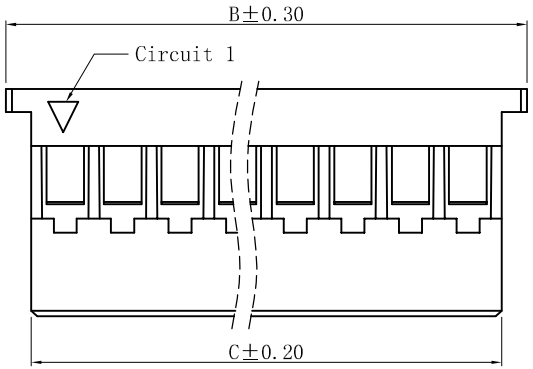

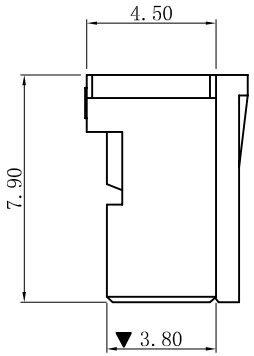

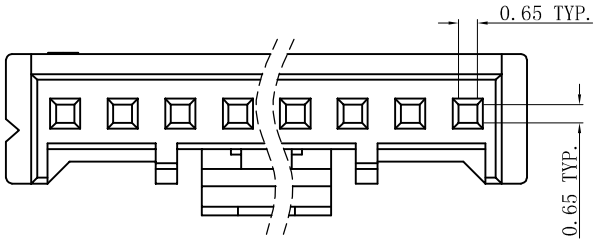

■ SPECIFICATIONS

- Voltage Rating: 250V AC, DC
- Current Rating: 3.0A, AC, DC
- Withstanding Voltage: 800V AC/minute
- Insulation Resistance:1000MΩ min
- Temperature range: -25° C~+85° C
- Contact resistance: 20mΩ max

■ HOUSING

- Part No.: H2013-NP
- Poles: 02-16P
- Housing Material: PA66 UL94V-0.
- The Dimension Marked “▼” Must Be Recorded

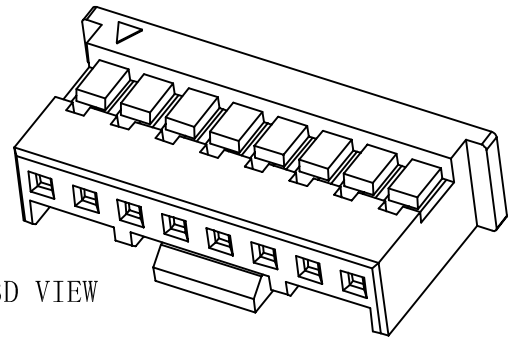

3D VIEW

Poles	Dimensions		
	A	B	C
02P	2.00	6.10	4.34
03P	4.00	8.10	6.34
04P	6.00	10.10	8.34
05P	8.00	12.10	10.34
06P	10.00	14.10	12.34
07P	12.00	16.10	14.34
08P	14.00	18.10	16.34
09P	16.00	20.10	18.34
10P	18.00	22.10	20.34
11P	20.00	24.10	22.34
12P	22.00	26.10	24.34
13P	24.00	28.10	26.34
14P	26.00	30.10	28.34
15P	28.00	32.10	30.34
16P	30.00	34.10	32.34

版次 REV.	说明 DESCRIPTION	日期 DATE.	承认 APPRO.
B	更新图面	2019-06-03	PH.Duan
A	新版本	2018-10-23	PH.Duan

一般公差 GENERAL TOLERANCE:	0±0.30 .0±0.25 .00±0.20 .000±0.05 ANGLE. ±1°
绘图/DR	PH.Duan
审核/CHECK	陈雄军
核准/APPRO	胡 进
日期/DATE	2019-06-03

XYDZ® 东莞市祥运连接器有限公司
Connectors DongGuan XiangYun Connectors CO.,Ltd

投影法 Projection		品 名 (PART NEME)	PA2.00mm Housing Connector Series
单位 Unit	MM		
比例/Scale	1:1		
大小/SIZE	A4	料 号 (PART NO)	H2013-NP
页码/SHEET	1/1		状态码 C
版本/Rev	B		