RoHS

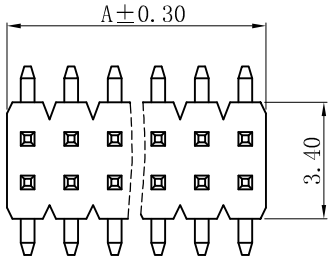

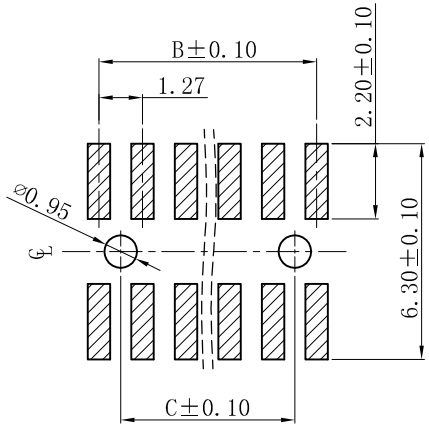

P.C.B LAYOUT: TOP VIEW
TOLERANCE: ±0.05mm

■ SPECIFICATIONS

- Voltage rating: 500V AC, DC
- Current rating: 3A, AC, DC
- Withstanding Voltage: 500V AC/minute
- Insulation resistance:1000MΩ min
- Temperature range: -25° C~+85° C
- Contack resistance: 10mΩ max

■ WAFER

- Part No.: W1272SV-2xNP-H1.0
- Poles : 02-100P
- Material: PA6T UL94V-0 Black
- Pin Material: Brass /Gold-flash
- The Dimension Marked “ ▼” Must Be Recorded

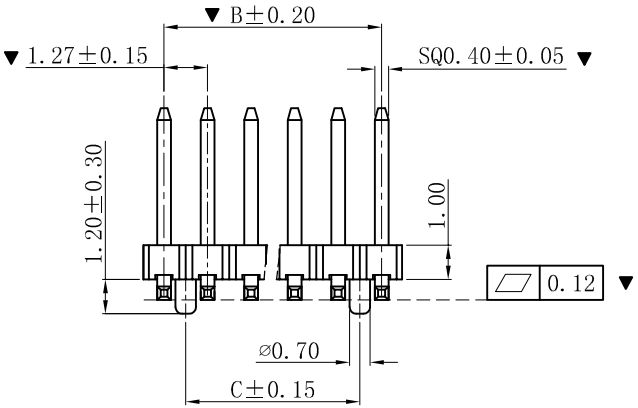

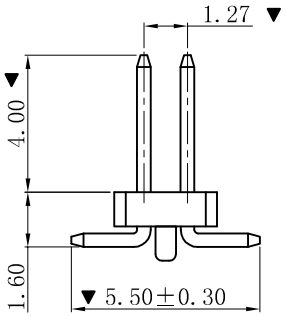

Poles	Dimensions(mm)			Poles	Dimensions(mm)		
	A	B	C		A	B	C
2x01	1.27	0.00	0.00	2x26	33.02	31.75	30.48
2x02	2.54	1.27	0.00	2x27	34.29	33.02	31.75
2x03	3.81	2.54	1.27	2x28	35.56	34.29	33.02
2x04	5.08	3.81	2.54	2x29	36.83	35.56	34.29
2x05	6.35	5.08	3.81	2x30	38.10	36.83	35.56
2x06	7.62	6.35	5.08	2x31	39.37	38.10	36.83
2x07	8.89	7.62	6.35	2x32	40.64	39.37	38.10
2x08	10.16	8.89	7.62	2x33	41.91	40.64	39.37
2x09	11.43	10.16	8.89	2x34	43.18	41.91	40.64
2x10	12.70	11.43	10.16	2x35	44.45	43.18	41.91
2x11	13.97	12.70	11.43	2x36	45.72	44.45	43.18
2x12	15.24	13.97	12.70	2x37	46.99	45.72	44.45
2x13	16.51	15.24	13.97	2x38	48.26	46.99	45.72
2x14	17.78	16.51	15.24	2x39	49.53	48.26	46.99
2x15	19.05	17.78	16.51	2x40	50.80	49.53	48.26
2x16	20.32	19.05	17.78	2x41	52.07	50.80	49.53
2x17	21.59	20.32	19.05	2x42	53.34	52.07	50.80
2x18	22.86	21.59	20.32	2x43	54.61	53.34	52.07
2x19	24.13	22.86	21.59	2x44	55.88	54.61	53.34
2x20	25.40	24.13	22.86	2x45	57.15	55.88	54.61
2x21	26.67	25.40	24.13	2x46	58.42	57.15	55.88
2x22	27.94	26.67	25.40	2x47	59.69	58.42	57.15
2x23	29.21	27.94	26.67	2x48	60.96	59.69	58.42
2x24	30.48	29.21	27.94	2x49	62.23	60.96	59.69
2x25	31.75	30.48	29.21	2x50	63.50	62.23	60.96

版次 REV.	说明 DESCRIPTION	日期 DATE.	承认 APPRO.
B	更新图面	2019-06-03	PH.Duan
A	新版本	2011-05-24	陈雄军

一般公差 GENERAL TOLERANCE:	0±0.30 .0±0.25 .00±0.20 .000±0.05 ANGLE.± 1°
绘图/DR	PH.Duan
审核/CHECK	陈雄军
核准/APPRO	胡 进
日期/DATE	2019-06-03

XYDZ® 东莞市祥运连接器有限公司
Connectors DongGuan XiangYun Connectors CO.,Ltd

投影法 Projection	
单位 Unit	MM
比例/Scale	1:1
大小/SIZE	A4
页码/SHEET	1/1
版本/Rev	B

品 名 (PART NEME)	PH1.27mm 排针 SMT 180° H1.0 立式 Connector Series	
料 号 (PART NO)	W1272SV-2xNP-H1.0	状态码 C