RoHS

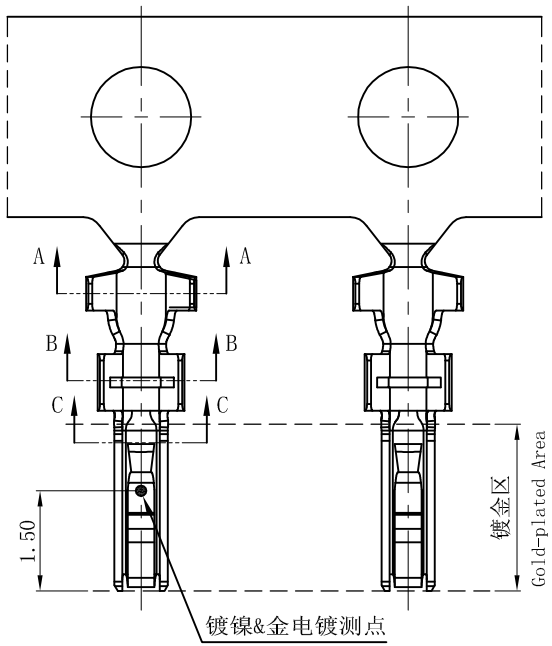

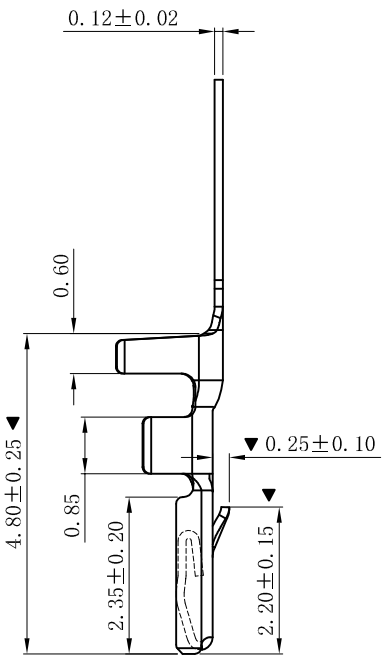

SPECIFICATIONS

- Voltage rating: 50V AC, DC
- Current rating: 1A, AC, DC
- Withstanding Voltage: 500V AC/minute
- Temperature range: -25° C~+85° C
- Contact resistance: 30mΩ max

TERMINAL

- Part No.: T1257PT
- Applicable wire: AWG#28-#32
- Material: Phosphor Bronze
- Finish: Tin-plated
- The Dimension Marked "▼" Must Be Recorded

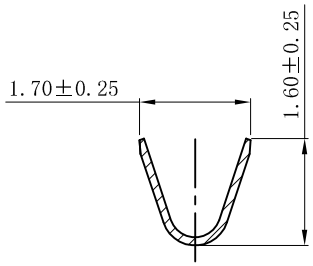

SECTION: A-A

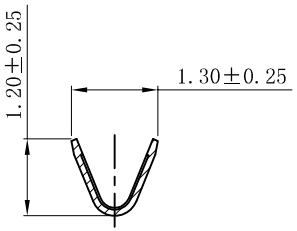

SECTION: B-B

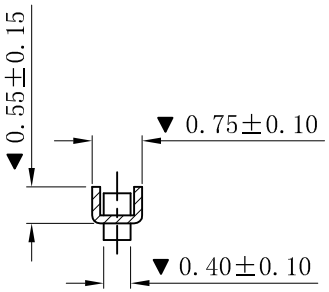

SECTION: C-C

REV.	DESCRIPTION	DATE.	APPRO.
D	更新图面	2019-06-03	PH.Duan
C	修订版本	2015-11-04	陈雄军
B	变更图宽格式内容	2013-12-27	陈雄军
A	新版本	2011-05-24	陈雄军

一般公差 GENERAL TOLERANCE:	0±0.30 .0±0.25 .00±0.20 .000±0.05 ANGLE. ±1°
绘图/DR	PH.Duan
审核/CHECK	陈雄军
核准/APPRO	胡 进
日期/DATE	2019-06-03

XYDZ® 东莞市祥运连接器有限公司
Connectors DongGuan XiangYun Connectors CO.,Ltd

投影法 Projection		品 名 (PART NEME)	GH1.25mm Female Terminal Connector Series
单位 Unit	MM		
比例/Scale	1:1		
大小/SIZE	A4	料 号 (PART NO)	T1257PT
页码/SHEET	1/1		状态码 C
版本/Rev	D		