RoHS

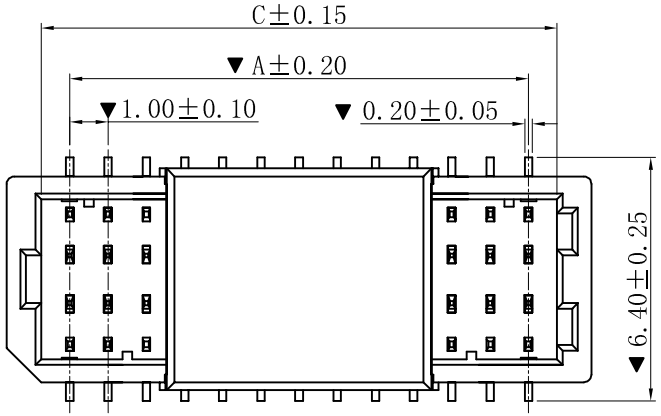

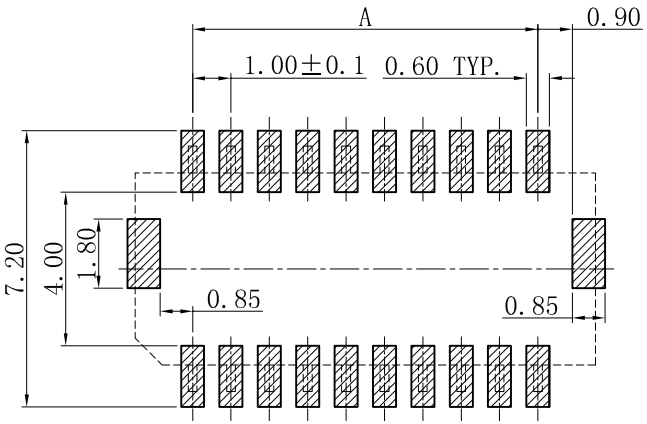

P.C.B LAYOUT: TOP VIEW
TOLERANCE: ±0.05mm

■ SPECIFICATIONS

- Voltage rating: 50V AC, DC
- Current rating: 1A, AC, DC
- Withstanding Voltage: 500V AC/minute
- Insulation resistance:100MΩ min
- Temperature range: -25° C~+85° C
- Contact resistance: 20mΩ max

■ WAFER

- Part No.: W1001SV-2xNP-JK
- Poles : 10-50P
- Housing Material: PA9T UL94V-0 BEIGE
- Cap: Nylon 9T UL94V-0
- Pin Material: Phosphor Bronze
- Contact Area Plating: Gold-flash,
  Solder Area: Tin-Plated
- Solder Tab: Brass,Tin-Plated
- The Dimension Marked "▼" Must Be Recorded

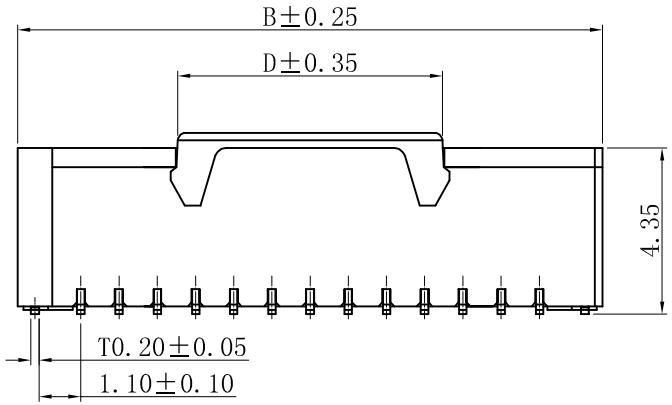

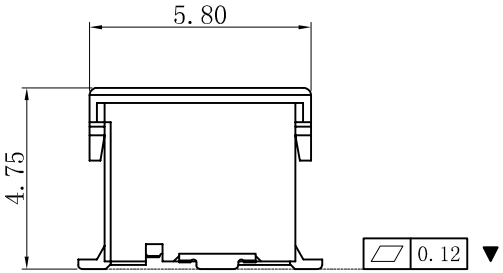

Poles	Dimensions (mm)			
	A	B	C	D
2x05	4.00	7.30	5.50	4.0
2x06	5.00	8.30	6.50	
2x10	9.00	12.30	10.50	7.0
2x11	10.00	13.30	12.50	
2x15	14.00	17.30	15.40	
2x20	19.00	22.30	20.40	
2x25	24.00	27.30	25.40	

版次 REV.	说明 DESCRIPTION	日期 DATE.	承认 APPRO.
A	新版本	2019-04-24	PH.Duan

一般公差 GENERAL TOLERANCE:	0±0.30 .0±0.25 .00±0.20 .000±0.05 ANGLE.±1°
绘图/DR	PH.Duan
审核/CHECK	陈雄军
核准/APPRO	胡 进
日期/DATE	2019-04-24

XYDZ® 东莞市祥运连接器有限公司
Connectors DongGuan XiangYun Connectors CO.,Ltd

投影法 Projection		品 名 (PART NEME)	SH1.00mm SMT 180° Wafer Connector Series
单位 Unit	MM		
比例/Scale	1:1		
大小/SIZE	A4	料 号 (PART NO)	W1001SV-2xNP-JK
页码/SHEET	1/1		状态码 C
版本/Rev	A		